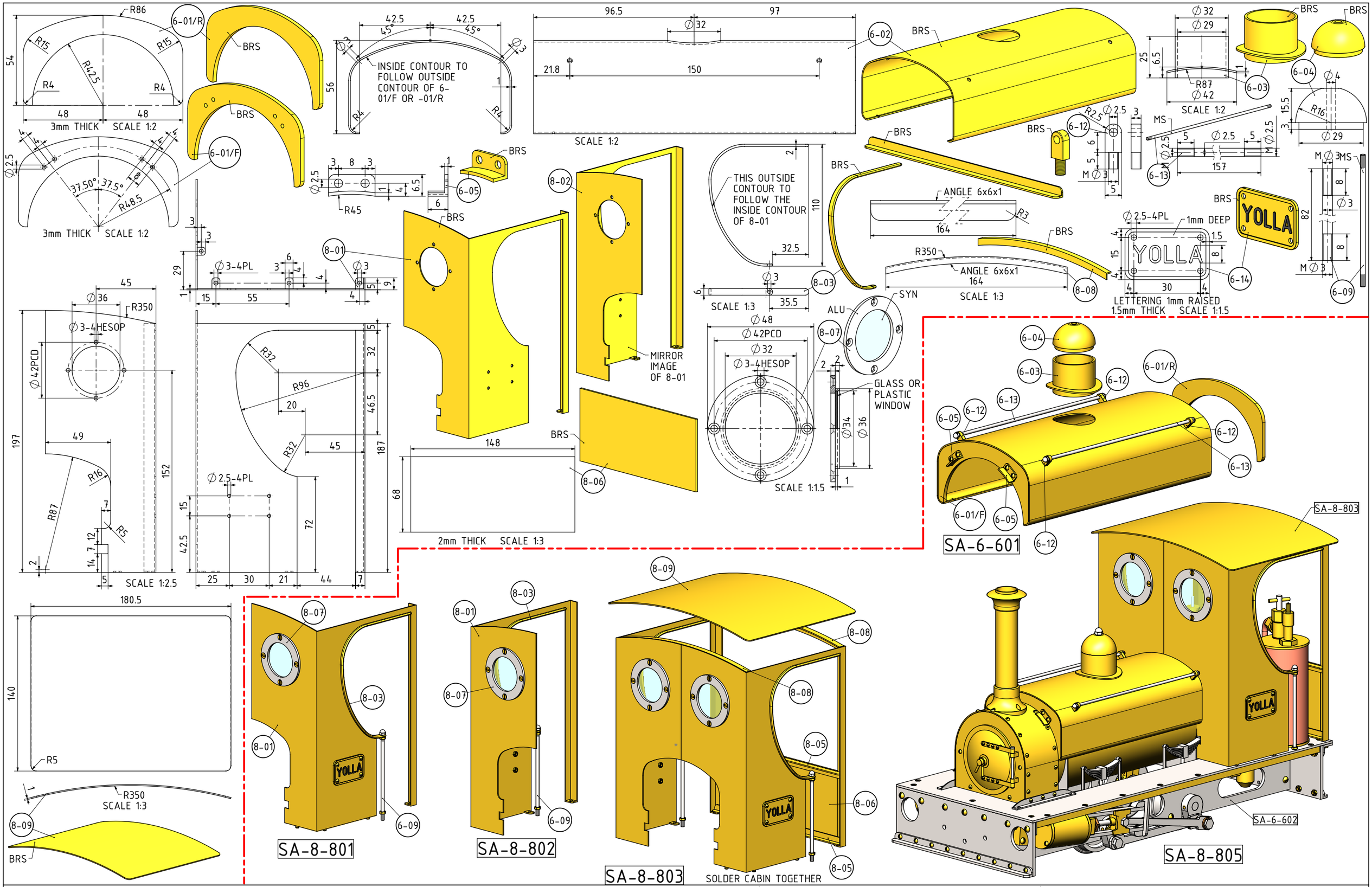


NOTES: THESE DRAWINGS ARE LOOSELY BASE ON A SET OF DRAWINGS WHICH WERE FOUND ON THE INTERNET AND WERE TITLED "WILD ROSE III" (FOOT PLATE STANDING GAS TANK AND CLOSED CABIN)

| | | | |
|---|---|---|---|
| TITLE<br>SIMPLE MODEL OF A NARROW GAUGE GAS FIRED LOCO CALLED "YOLLA" (64mm/2.5") | DRAWING CONTENTS<br>PARTS AND ASSEMBLIES AND RENDERED PICTURE | PROJECT No 07E-12-01<br>JDW DRAUGHTING SERVICES<br>J.A.M. DE WAAL, 12 BRIGHTWELL STREET PAPAKURA 2110, NEW ZEALAND. PHONE: 0064 09 2988815. MOB: 0211791000 E-MAIL: dewaal@xtra.co.nz. | PROJECTION JDWDS<br>DATE DECEMBER-2016<br>SHEET: 07 OF 08 |
| | | MODEL SCALE: 1:1<br>DWG SCALE: 1:1 @A3 OR AS SHOWN<br>Copyright © J.A.M. DE WAAL PAPAKURA NZ<br>A3 No: YOLLA-1-07 | |